MasterLine 16 Horizontal Panel
Window Head
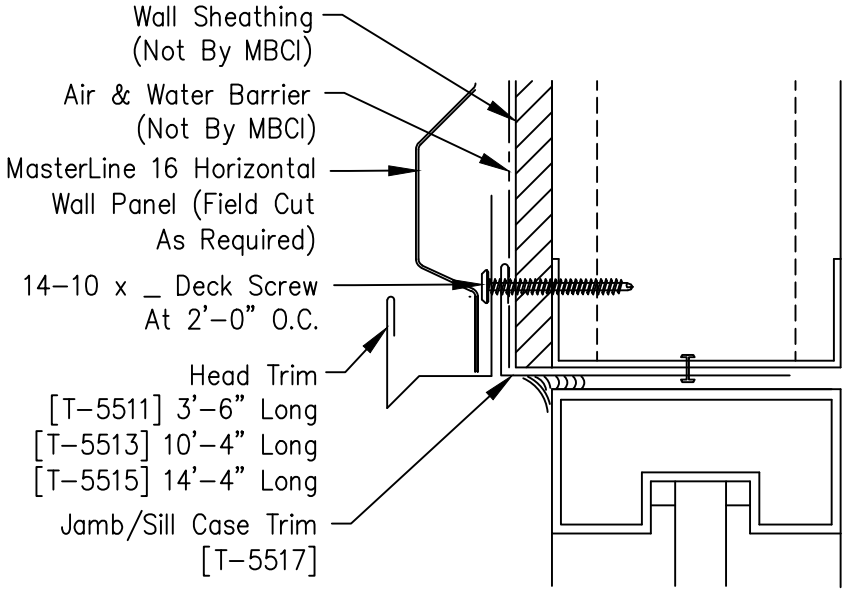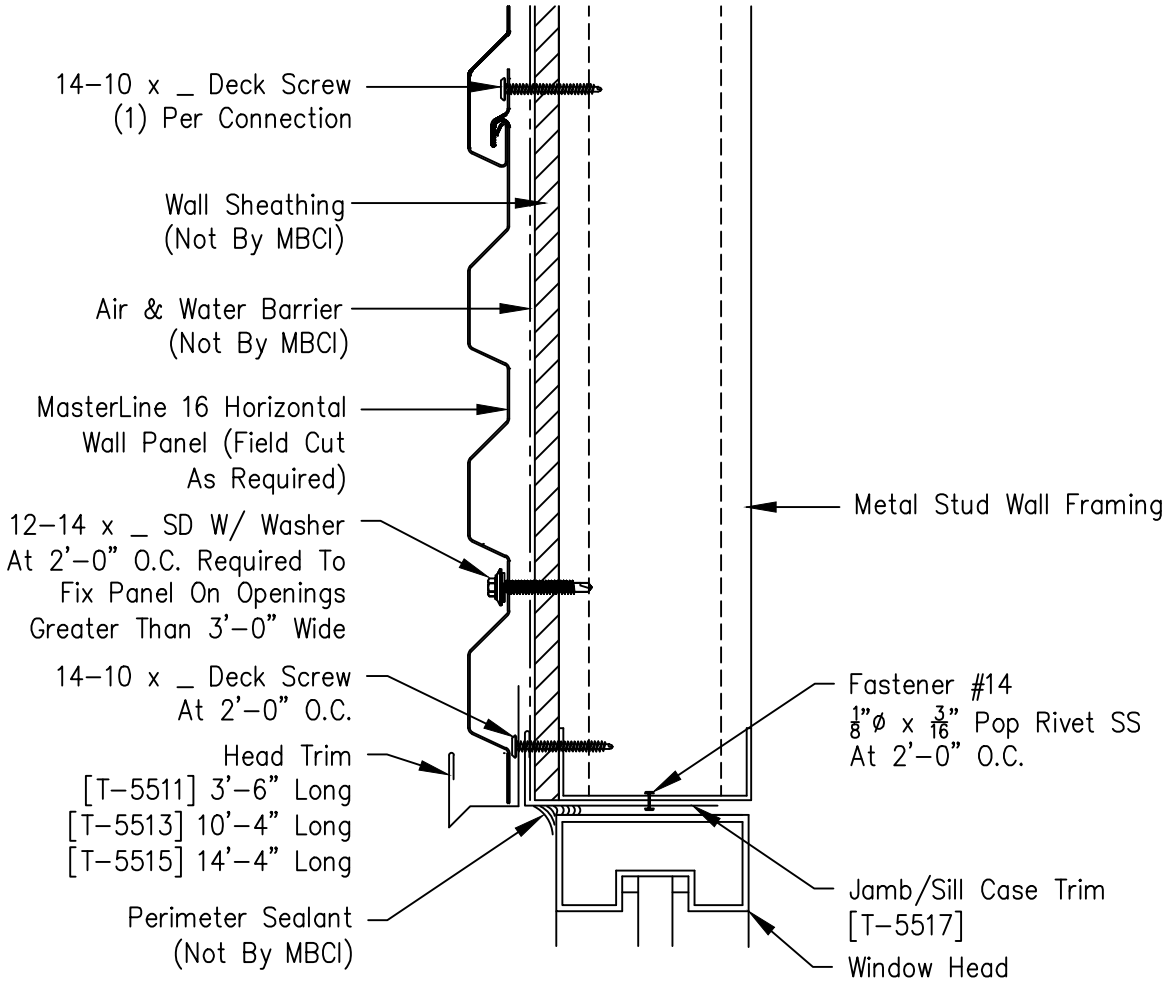
Page	
ML-HD-02	
Date	Rev
Aug '17	01