MasterLine 16 Horizontal Panel
Walk Door Head
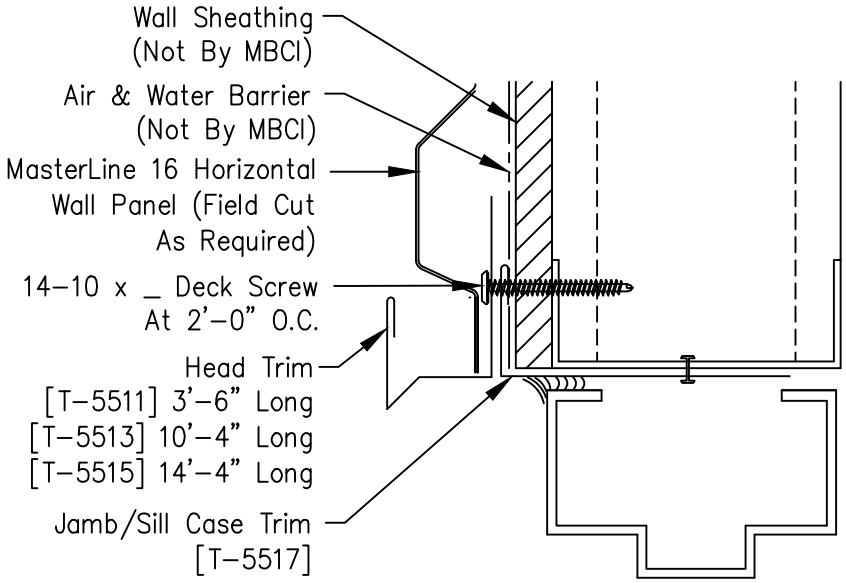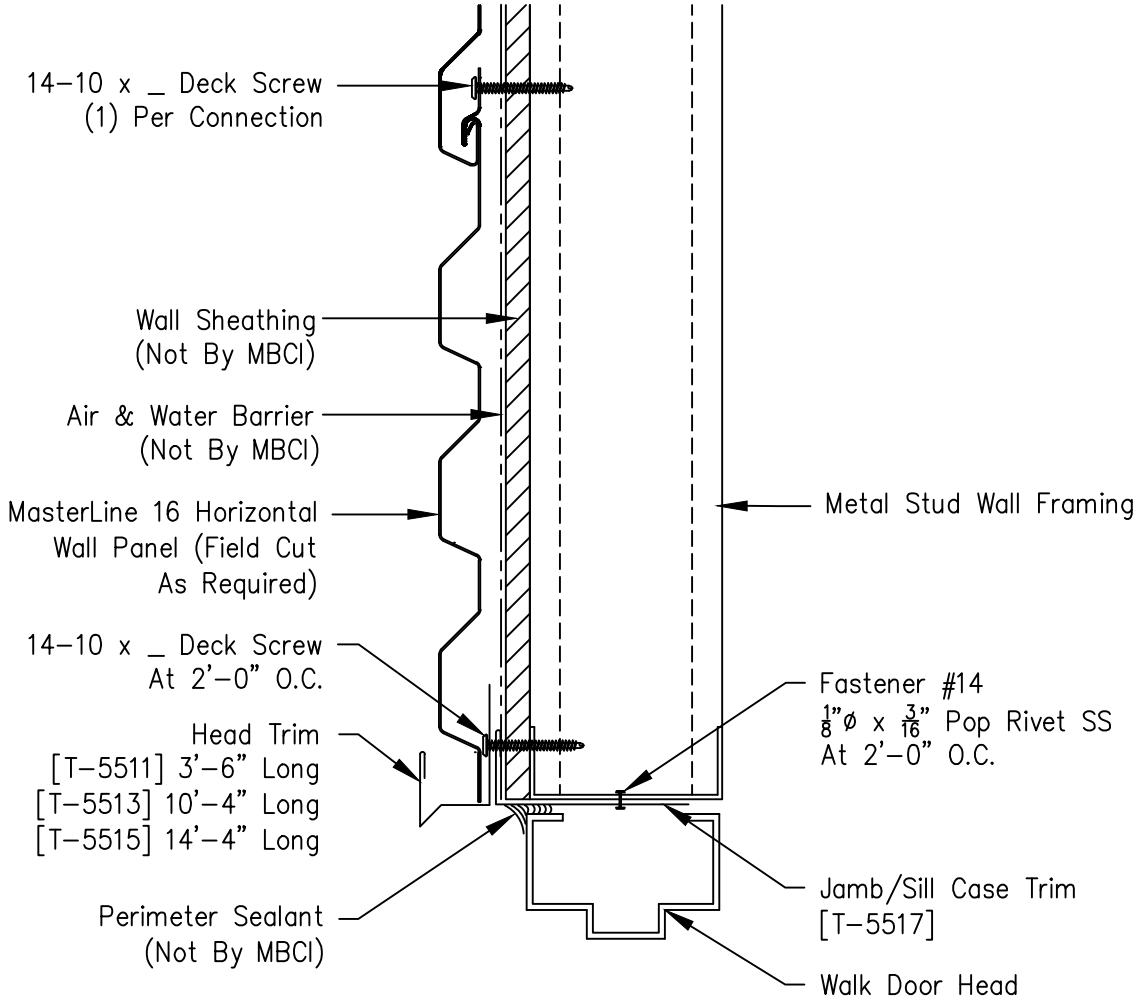
Page	
ML-HD-01	
Date	Rev
Aug '17	01