MasterLine 16 Horizontal Panel
Outside Corner
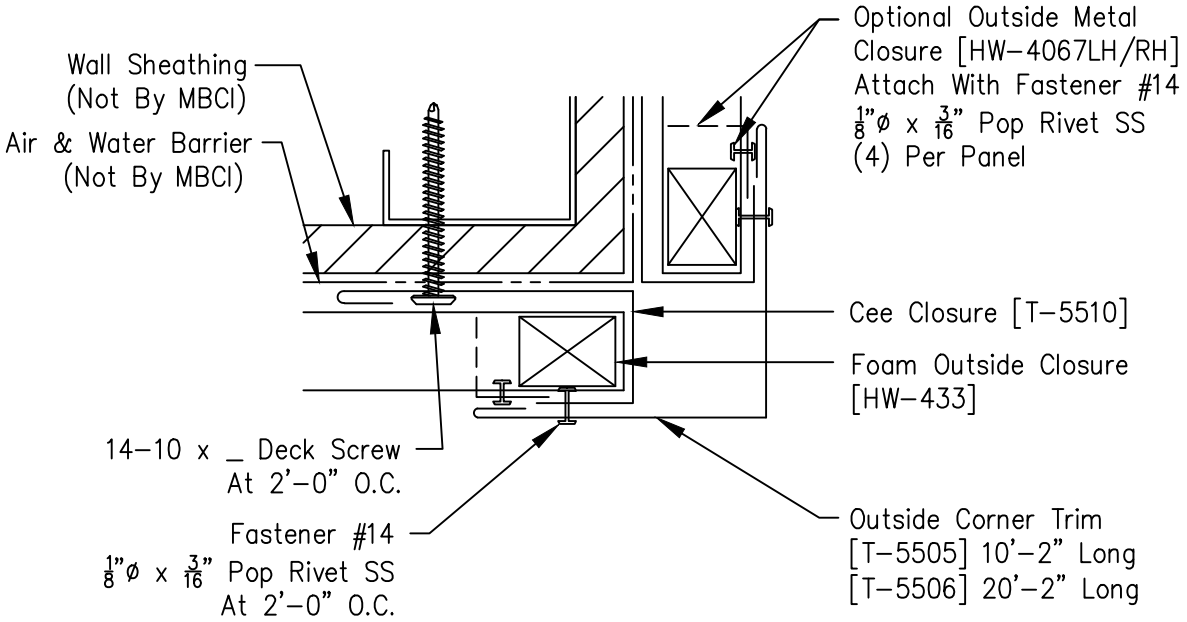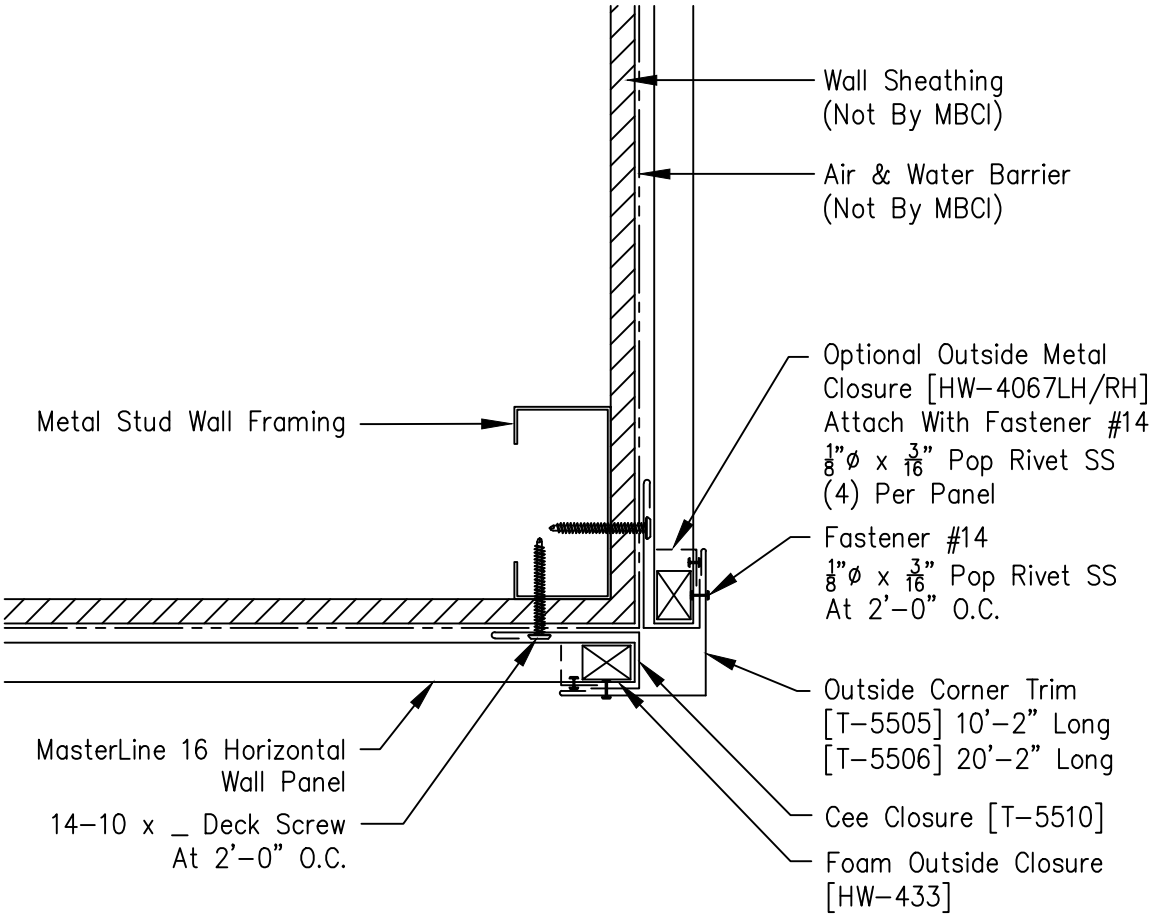
Page	
ML-OSC-01	
Date	Rev
Aug '17	01