MasterLine 16 Horizontal Panel
Inside Corner
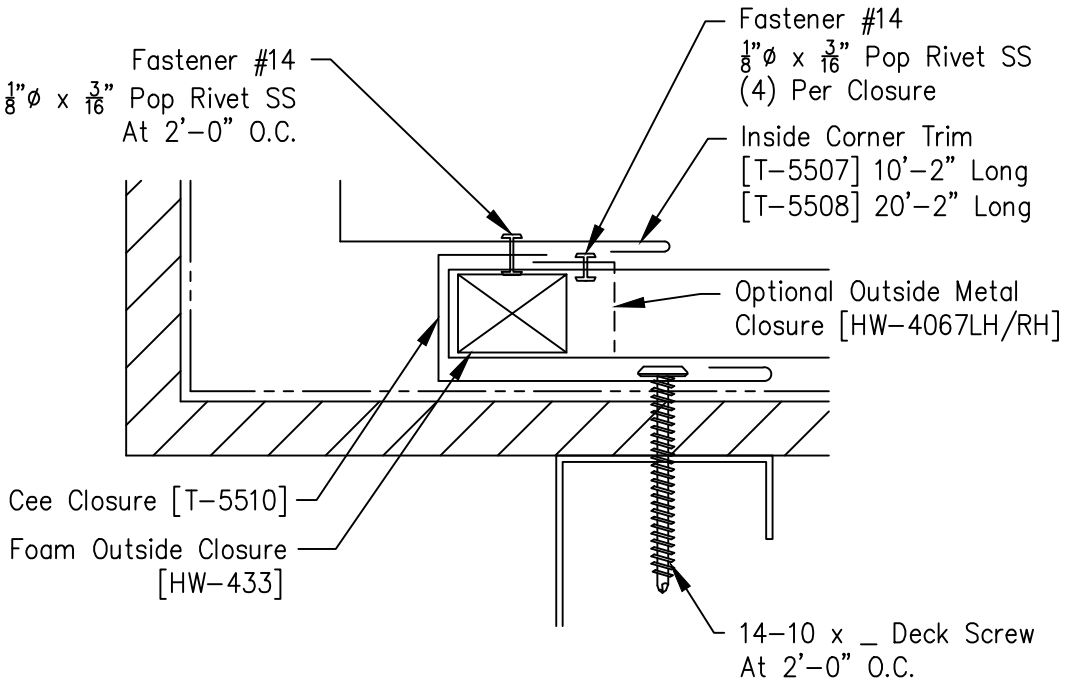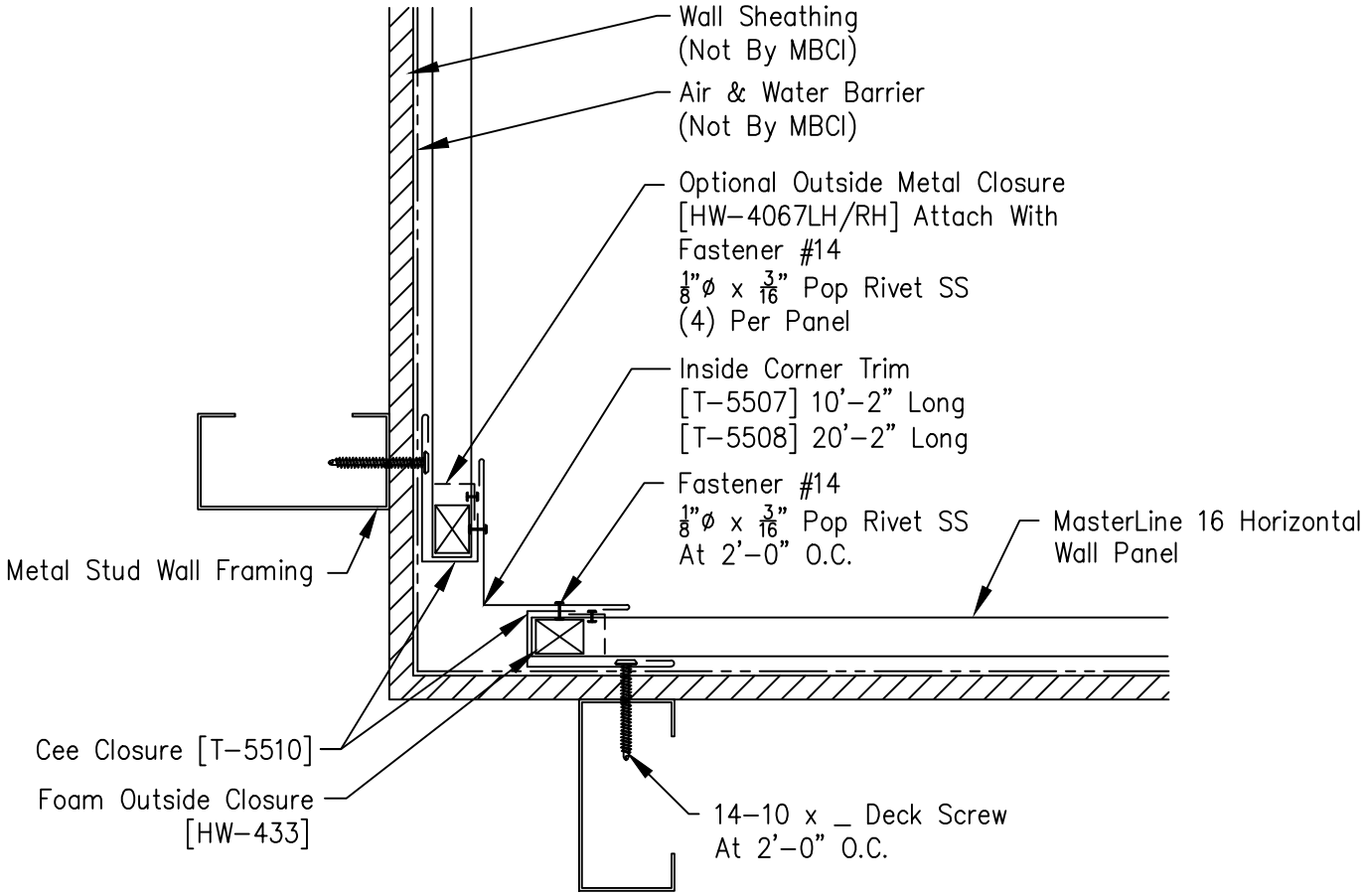
Page	
ML-ISC-01	
Date	Rev
Aug '17	01