CFR Insulated Roof Panel
Valley

Page	
MBCFR080	
Date	Rev
Jun '16	00

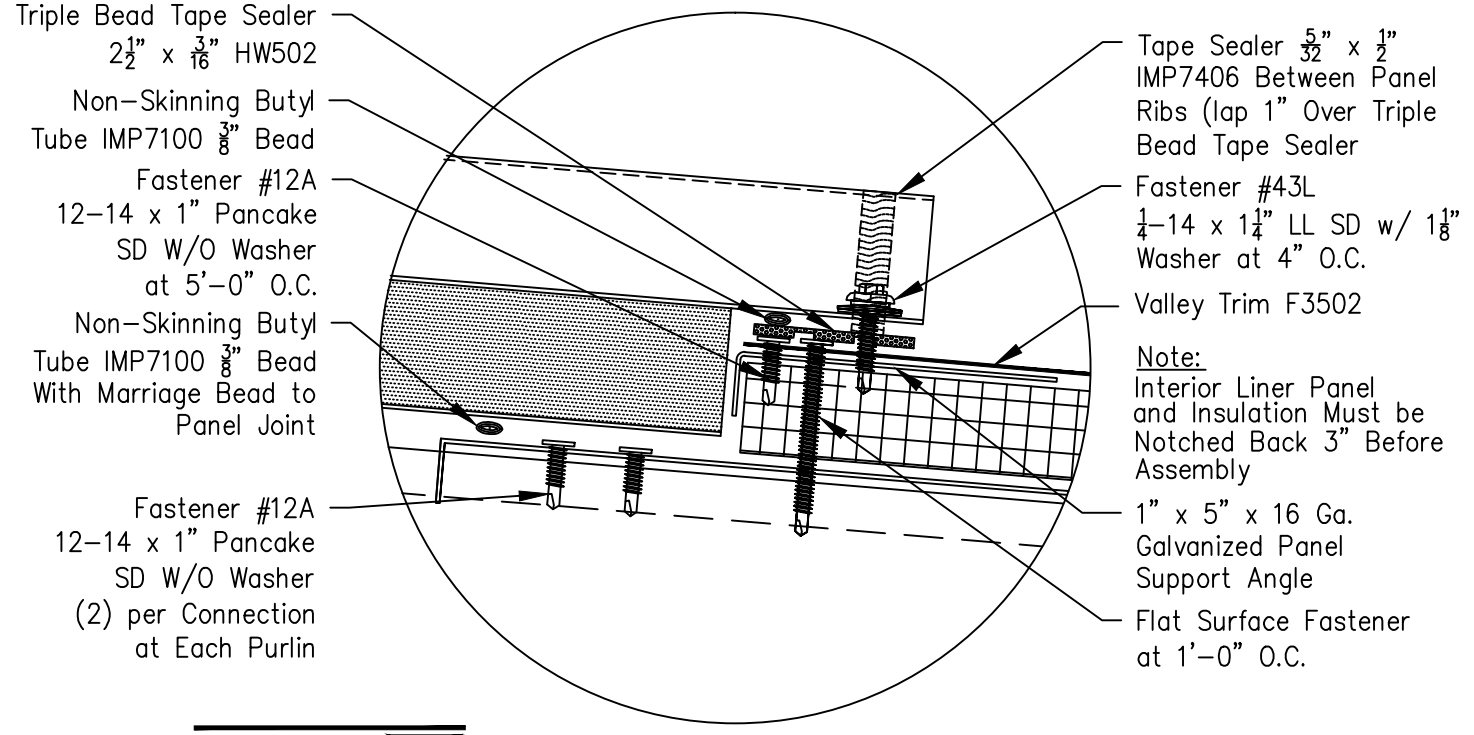

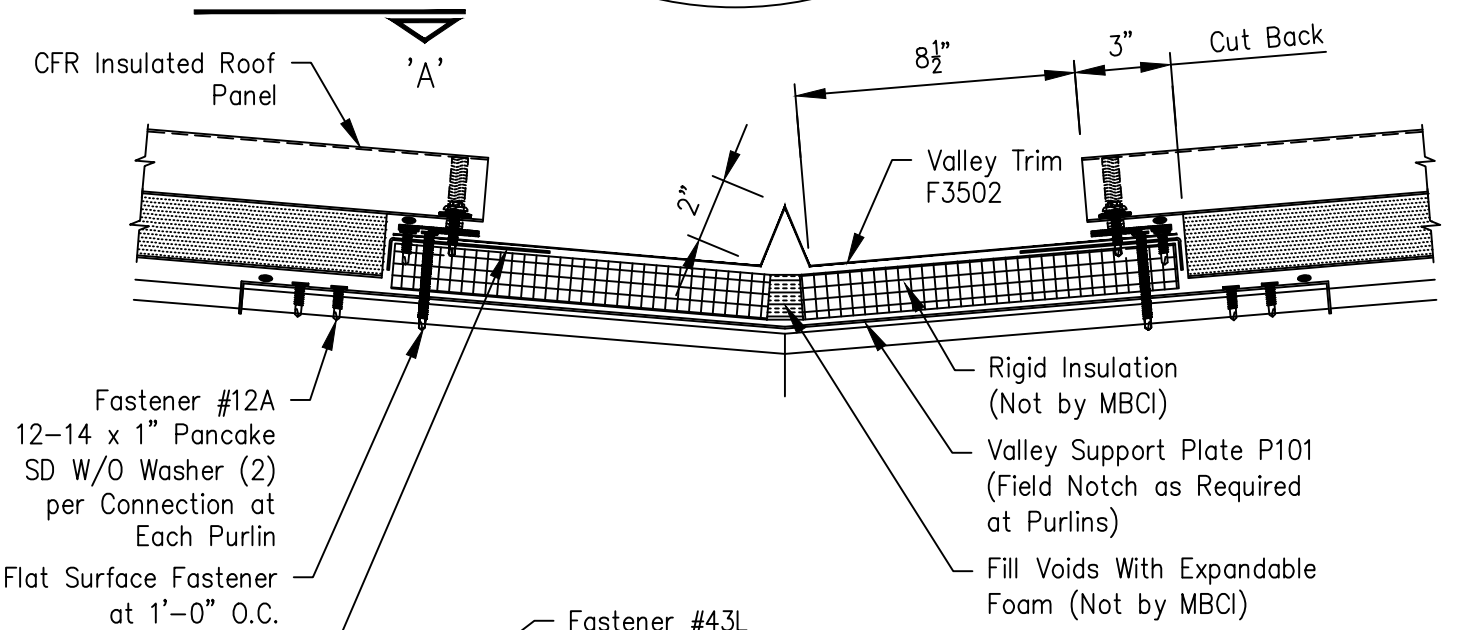

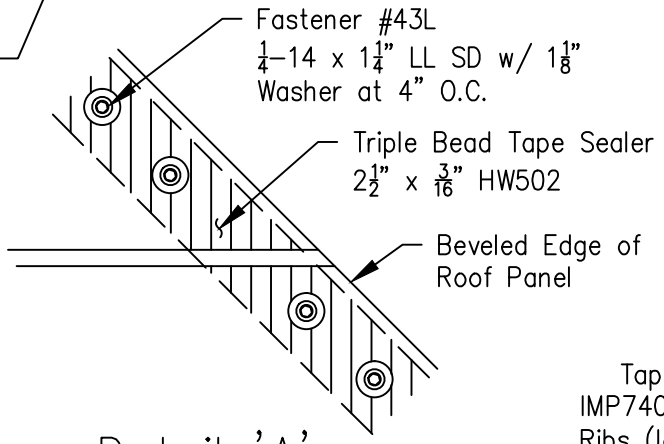
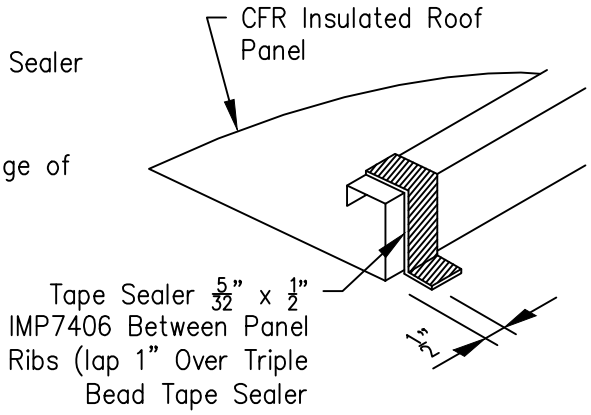
Detail 'A'