CFR Insulated Roof Panel
Parapet Rake - Sheeted Wall
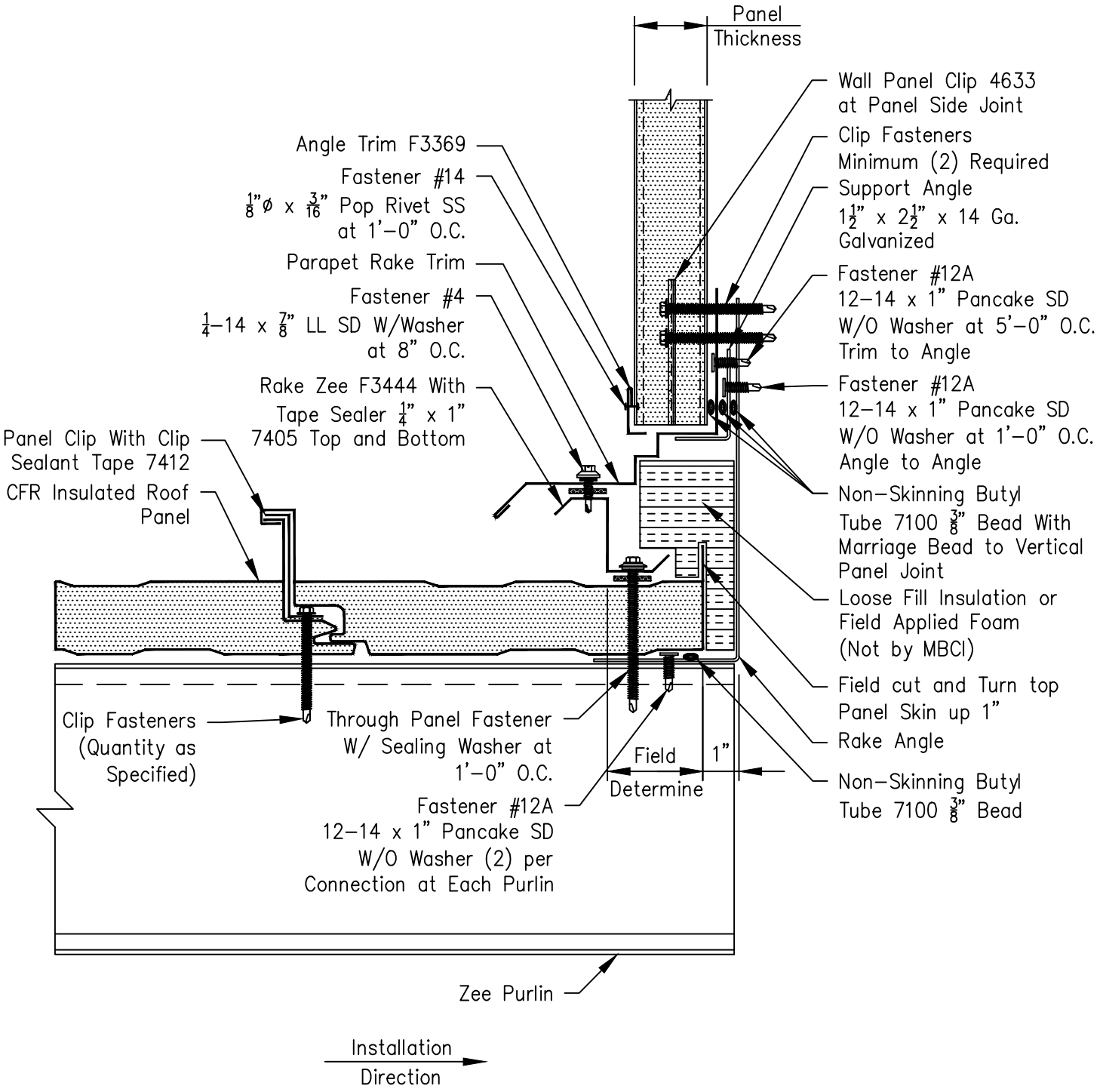
Page	
MBCFR063	
Date	Rev
Jun '16	00