# CFR Insulated Roof Panel
# Eave With Eave Trim
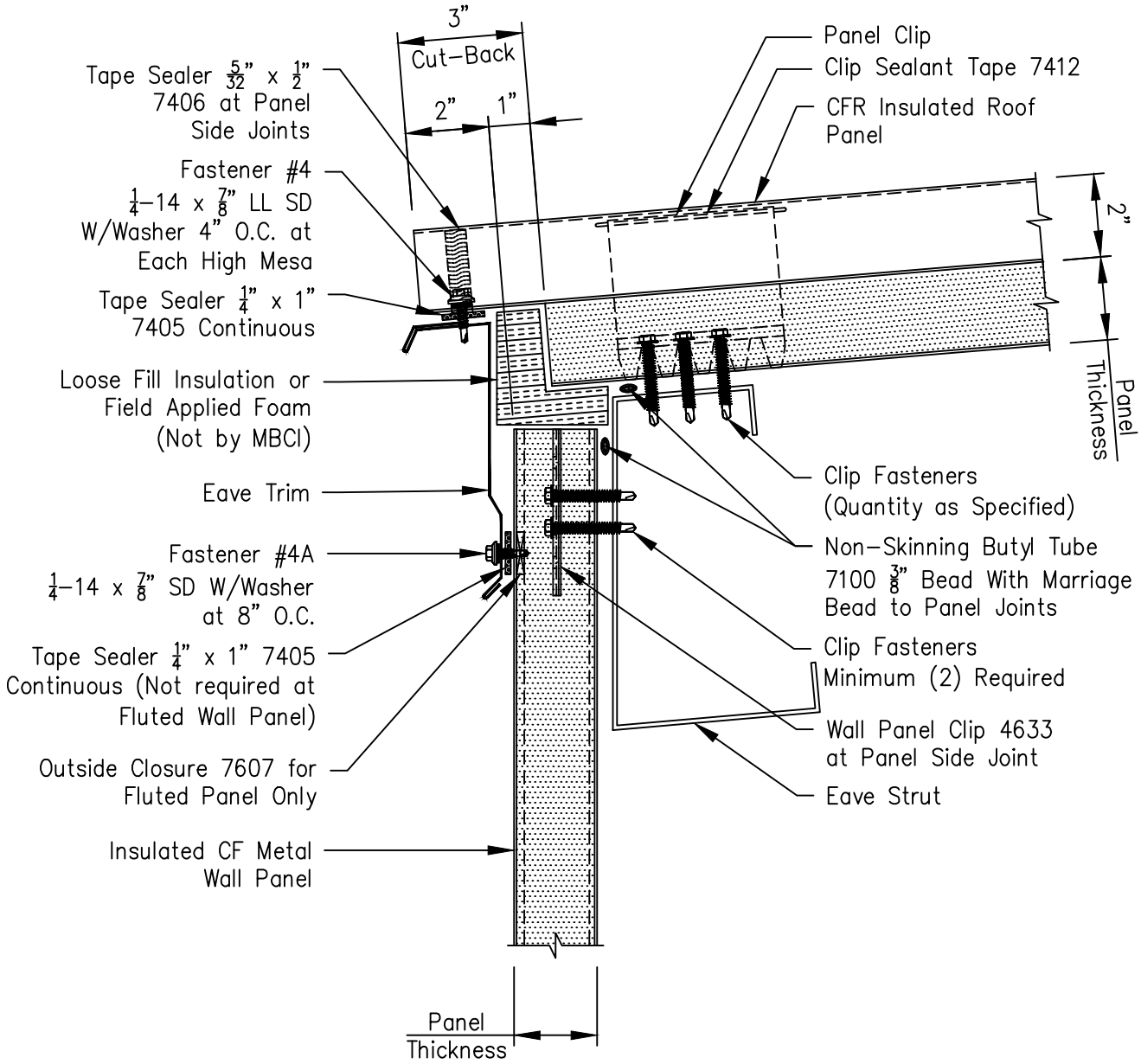
| Page | |
|---|---|
| MBCFR021 | |
| Date | Rev |
| Jun '16 | 00 |