FW-120 Wall Panel
Walk Door Jamb
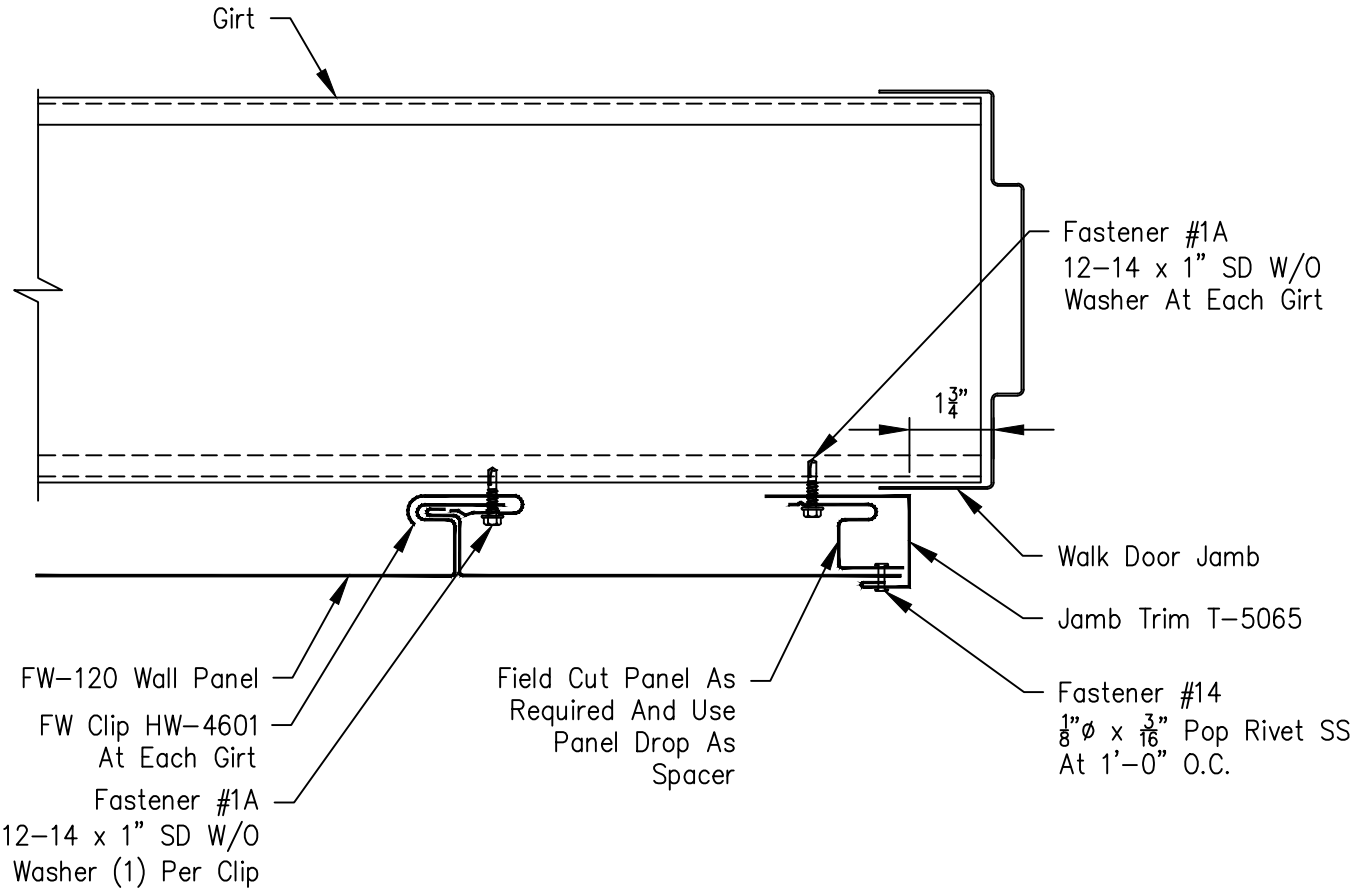
Page	
FW-G-JB-12	
Date	Rev
Apr '18	00