# FW-120 Wall Panel
## Optional Window/ / Louver Jamb
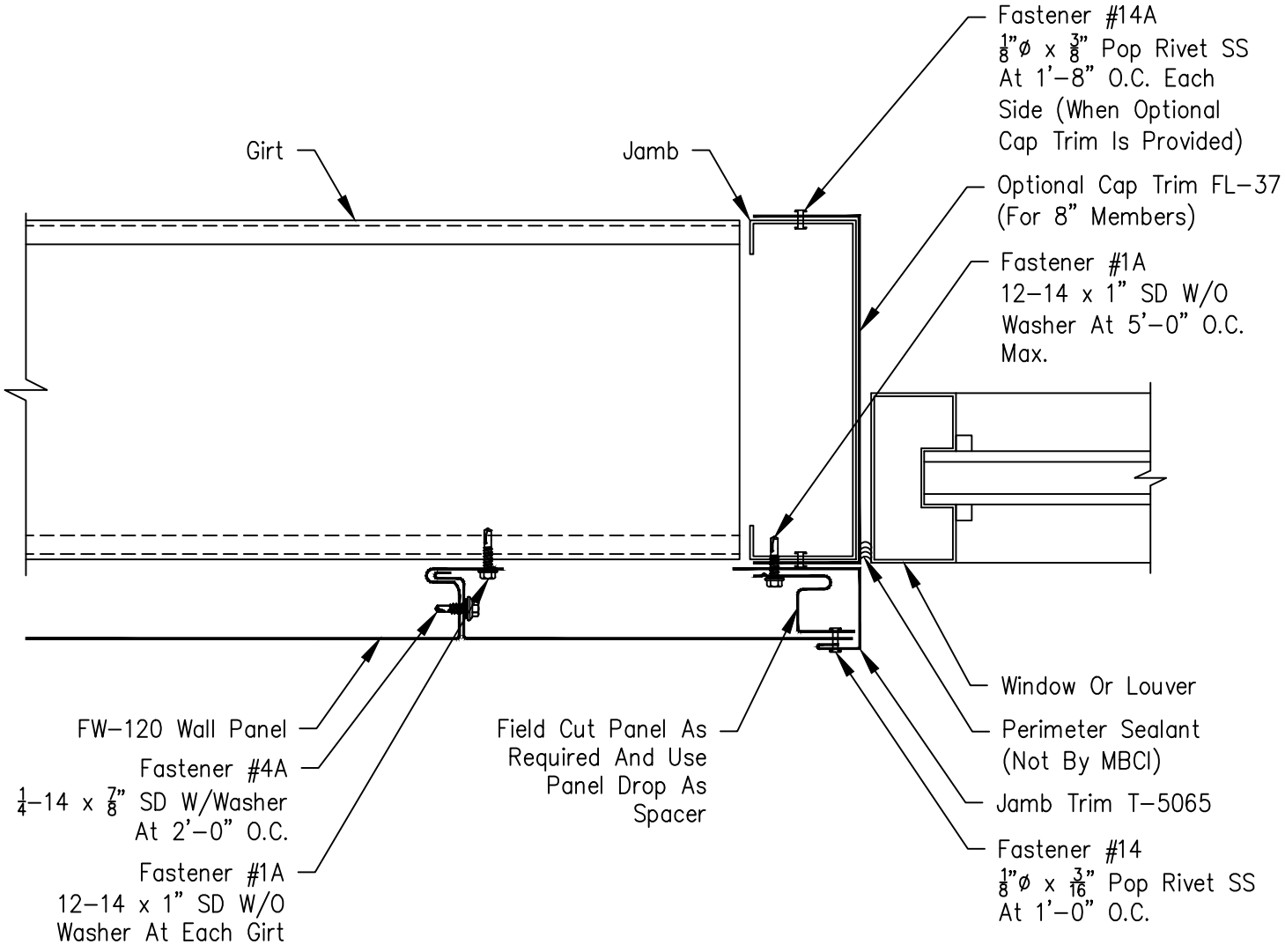
| Page | |
|---|---|
| FW-G-JB-03 | |
| Date | Rev |
| Apr '18 | 01 |