FW-120 Wall Panel
Optional Walk Door Jamb
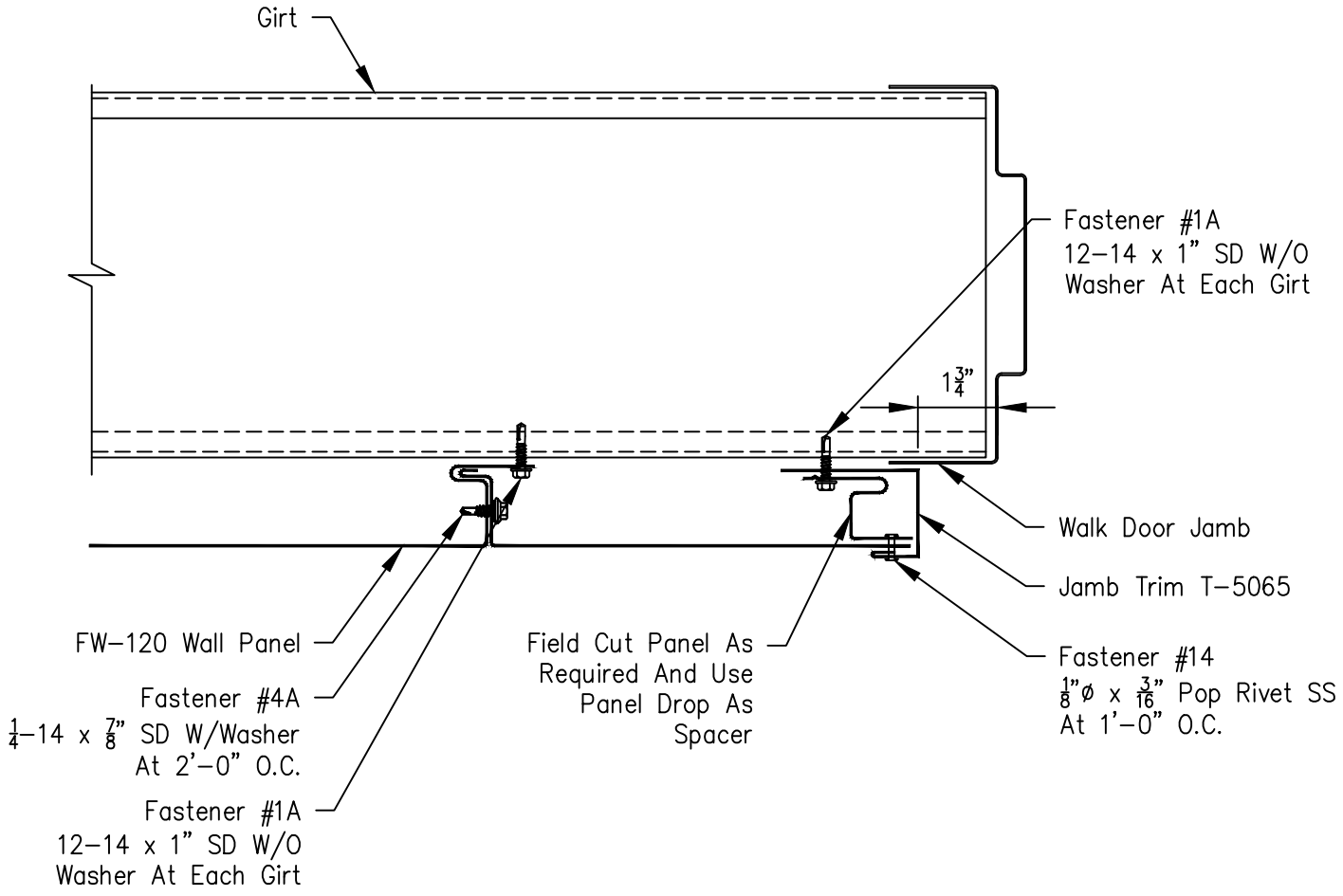
Page	
FW-G-JB-02	
Date	Rev
Apr '18	01