Horizontal FW-120 Wall Panel
Optional Base With Sheeting Notch And Trim
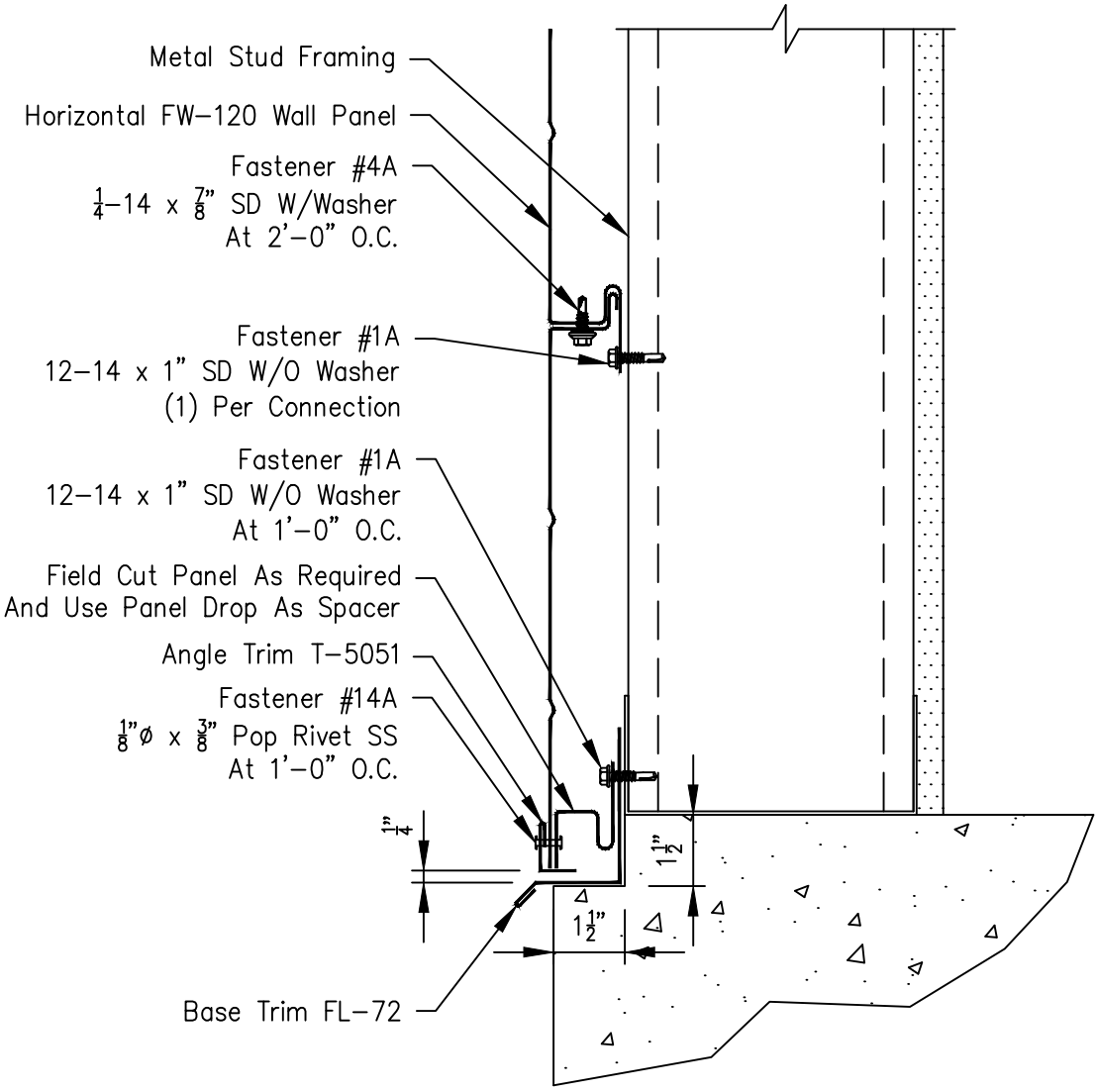
Page	
FW-H-BA-01	
Date	Rev
Apr '18	01