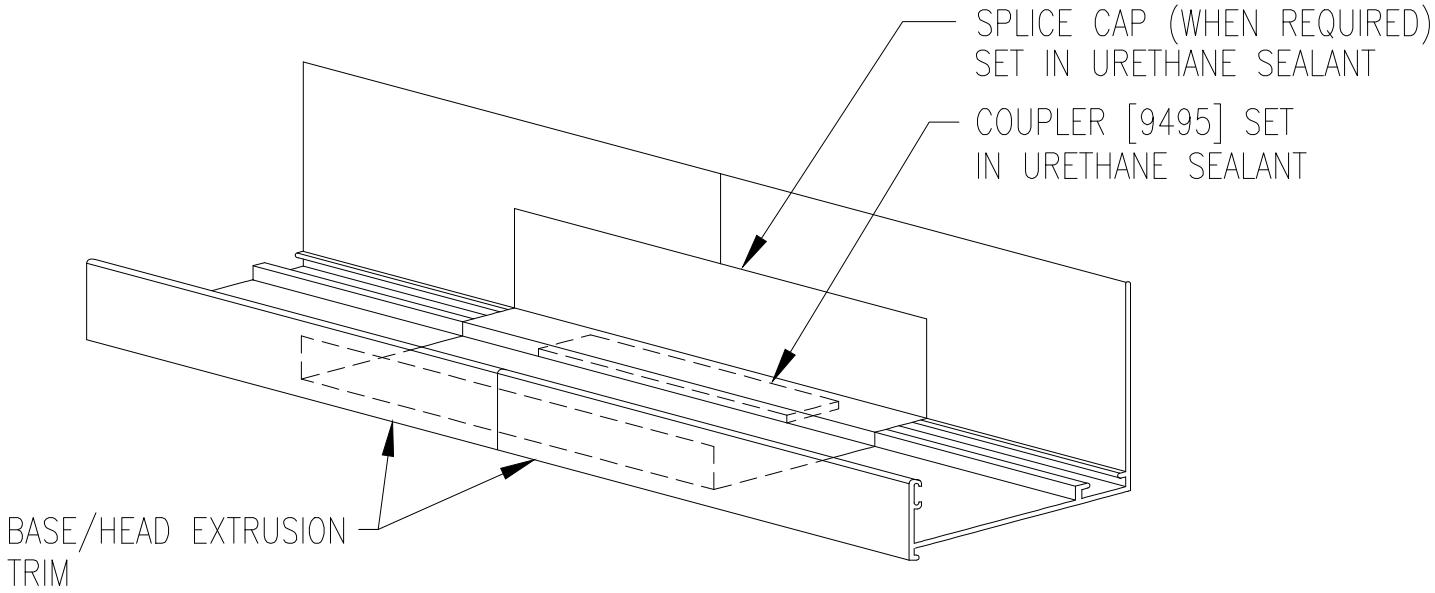
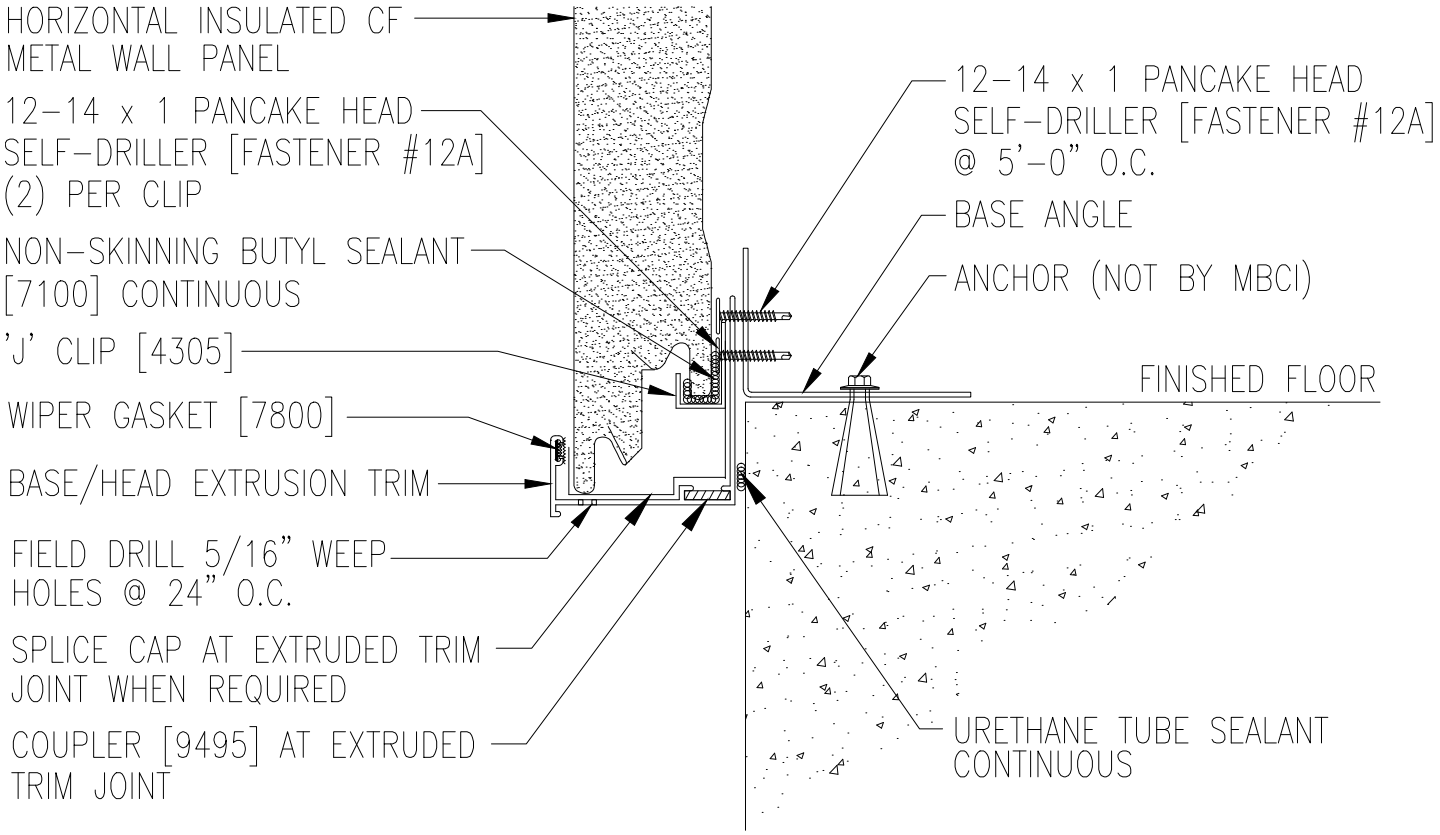
EXTRUDED TRIM JOINT DETAIL